Shed Bahama- Bungalow 6 ft x 10 ft

GENERAL NOTES

1. FOUNDATION PLANS ARE NOT PART OF THIS PLAN SET AND ARE GOVERNED BY LOCAL JURISDICTION.

2. BUILDINGS ARE APPROVED FOR RESIDENTIAL LAWN STORAGE ONLY.

3. THIS BUILDING IS EXEMPT FROM THE FECC PER SECTIONS R 101.4.2.4, R402.1.

4. REFER TO TIE DOWN DETAILS FOR PROPER INSTALLATION REQUIREMENTS TO MEET CODE.

5. ALL LUMBER FOR CONSTRUCTION WILL BE SYP#2 EXCEPT AS NOTED.

6. GUTTERS SHALL BE SITE INSTALLED PER THE LOCAL AUTHORITY HAVING JURISDICTION AND PERMITTING REQUIREMENTS.

7. ALL WINDOWS AND DOORS TO MEET THE MINIMUM SPECIFICATIONS PER THE APPROVED PLANS AND THE FLORIDA BUILDING CODE.

8. IN ACCORDANCE WITH FBC 1609.1.2, STORAGE SHEDS THAT ARE NOT DESIGNED FOR HUMAN HABITATION AND THAT HAVE A FLOOR AREA OF 720 SQUARE FEET OR LESS ARE NOT REQUIRED TO COMPLY WITH THE MANDATORY WINDBORNE DEBRIS IMPACT STANDARDS OF THIS CODE.

9. IN ACCORDANCE WITH FBC 1010.1.1, EXCEPTION (10.) BUILDINGS THAT ARE 400 SQ-FT OR LESS AND THAT ARE INTENDED FOR USE IN CONJUNCTION WITH ONE- AND TWO-FAMILY RESIDENCES ARE NOT SUBJECT TO THE DOOR HEIGHT AND WIDTH REQUIREMENTS OF THIS CODE. STRUCTURES 400 SQ-FT OR MORE SHALL HAVE AN 80” MINIMUM DOOR.

10. IN ACCORDANCE WITH FLORIDA STATUTE 553.80(1)(d), LAWN STORAGE BUILDINGS AND STORAGE SHEDS BEARING THE INSIGNIA OF THE DEPARTMENT ARE NOT SUBJECT TO 553.842 (FLORIDA PRODUCT APPROVALS) BUT SHALL MEET THE DESIGN WIND LOAD REQUIREMENTS OF THE 2023 FBC 8TH EDITION. SUCH BUILDINGS THAT DO NOT EXCEED 400 SQUARE FEET MAY BE DELIVERED AND INSTALLED WITHOUT NEED OF A CONTRACTOR'S OR SPECIALTY LICENSE.

11. FLAT METAL STRAPS CAN BE BENT AROUND STRUCTURAL MEMBERS OF WALL STUDS, TRUSSES, CHORDS, ETC. TO HELP SECURE THESE MEMBERS, PROVIDED THAT THE ADDED BEND DOES NOT INTERFERE WITH ANY OF THE EXISTING BREAKS/BENDS IN THE STRAP.

12. AS PER FBC SECTION 1626.L EXCEPTION (F): STORAGE SHEDS THAT ARE NOT DESIGNED FOR HUMAN HABITATION AND THAT HAVE A FLOOR AREA OF LESS THAN 720 SQUARE FEET OR LESS ARE NOT REQUIRED TO COMPLY WITH THE MANDATORY WINDBORNE DEBRIS IMPACT STANDARDS OF THIS CODE.

13. COMPONENTS/CLADDING ARE IN COMPLIANCE WITH THE 2023 FBC 8TH EDITION.

14. SHEDS LOCATED IN FLOOD HAZARD AREAS MUST COMPLY WITH THE LOCAL FLOOD ZONE REGULATIONS.

15. IF A WALL IS FRAMED FOR FUTURE HVAC UNITS THAT SHALL BE APPROVED BY THE AHJ AND SHALL COMPLY WITH LOCAL REQUIREMENTS FOR PERMITTING.

16. WINDOWS AND DOORS INSTALLED BY THE CUSTOMER THAT SHALL BE APPROVED BY THE AHJ AND SHALL COMPLY WITH LOCAL REQUIREMENTS FOR PERMITTING.

17. HVHZ COMPONENTS FOR SHEDS REQUIRE THAT INSTALLATION OCCURS PER MANUFACTURER'S INSTRUCTIONS.

18. FLOOD VENTS TO BE PROVIDED AND INSTALLED ON-SITE BY OTHERS PER LOCAL AUTHORITY HAVING JURISDICTION PER ASCE 24-14.

WIND LOAD CRITERIA

1. WIND SPEED (MPH): 144 Vasd/185 Vult

2. RISK CATEGORY: I

3. BUILDING CATEGORY: II

4. ENCLOSURE CLASSIFICATION: ENCLOSED

5. INTERNAL PRESSURE COEFFICIENT: GCpi = 0.18

6. EXPOSURE FACTOR: C

7. WIND DIRECTIONALITY FACTOR (Kd): 0.85

8. GUST RESPONSE FACTOR (Gh): 0.85

9. MAIN FRAME STRUCTURE OVERTURNING LOAD: Pr = -93.0 PSF

10. COMPONENT & CLADDING LOAD

a. PW = Zone 1: -116.4 PSF, Zone 2: -154.2 PSF, Zone 3: -202.2 PSF (ROOF)

b. PW = Zone 4: +63.0/-64.8 PSF, Zone 5: +63.0/-84.6 PSF (WALL)

11. THIS BUILDING IS NOT DESIGNED FOR PLACEMENT ON THE UPPER HALF OF A HILL OR ESCARPMENT EXCEEDING 15 FEET IN HEIGHT.

12. SEISMIC LOAD: N/A

13. FLOOD LOAD: SHEDS LOCATED IN A FLOOD HAZARD AREA MUST COMPLY WITH THE LOCAL FLOOD ZONE REGULATIONS.

BUILDING CODE	FBC, 8TH EDITION (2023)
RESIDENTIAL CODE	FRBC, 8TH EDITION (2023)
ELECTRICAL CODE	2020 NATIONAL ELECTRICAL CODE (NEC/NFPA 70-20)
BUILDING TYPE	RESIDENTIAL LAWN STORAGE SHED
MANUFACTURER	SUPERIOR SHEDS, LLC
AGENCY	INTERTEK (INTERTEK-ATI)
AGENCY PLAN NUMBER	SUP001
CONSTRUCTION TYPE	V-B
FIRE PROTECTION	NO
FIRE SUPPRESSION SYSTEM	NO
OCCUPANCY	UTILITY
ALLOWABLE # OF STORIES	1
WIND VELOCITY	185 MPH, EXPOSURE C
FIRE RATING OF EXTERIOR WALLS	0
FLOOR LIVE LOAD - STANDARD	75 PSF
FLOOR LIVE LOAD - OPTIONAL	125 PSF
FLOOR DEAD LOAD	10 PSF
ROOF LIVE LOAD	30 PSF
ROOF DEAD LOAD	10 PSF
"R" RATING OF FLOOR,WALL,&ROOF	N/A
MODULES PER BUILDING	1
SQUARE FOOTAGE	719 SQ/FT. MAX.
HURRICANE PROTECTION USAGE	NO
HURRICANE SHELTER USAGE	NO
HVHZ APPROVED	YES

LOCATION MAP



TABLE OF CONTENTS	
SHEET	SHEET DESCRIPTION
1	COVER SHEET
2	EXTERIOR ELEVATIONS AND ISOMETRIC VIEW
3	FLOOR PLAN/ ELECTRICAL WIRING
4	FLOOR FRAMING PLAN
5	ROOF FRAMING AND CONNECTION DETAILS
6	WALL FRAMING AND CROSS SECTIONS
7	ANCHORING DETAILS
8	SCHEDULES

AS-BUILT DRAWINGS

EXISTING PREFABRICATED SHED STRUCTURES

PROJECT NAME: Existing Prefabricated Shed Structures - As-Built Documentation

PROJECT ADDRESS: 2811 NW 74 AVE, Miami, FL 3312

FOLIO NUMBER: 30-3026-019-0070

OWNER: AMC PARTNSERSHIP

PREPARED FOR: Resolution for Violation / TICKET # P073717 / P073719 (Detached Structure with Electrical)

Intertek
1748 33rd Street
Orlando, Florida 32839

This document meets or exceeds the Requirements of the State of Florida Manufactured Building Rules & Regulations

Construction Type: VB
Occupancy: Shed
Allowed Floors: 1
Fire Rating Ext. Walls: 0
Wind Velocity: 185 Mph
Plan #: R-22484
Floor Load: 75psf/125psf
Approval Date: 07/20/2026

Ryan Knowles, SMP-64

TITLE: Shed Bahama- Bungalow 6 ft x 10 ft

ARCHITECTURAL DRAWINGS

PREPARED BY:
COSMO Management Group
10800 Biscayne Blvd. Suite 540 Miami Shores Fl 33161

REMARKS	BYDATE

THE INSTALLATION DETAILS DESCRIBED HEREIN ARE GENERIC AND MAY NOT REFLECT ACTUAL CONDITIONS FOR A SPECIFIC SITE. IF SITE CONDITIONS CAUSE INSTALLATION TO DEVIATE FROM THE REQUIREMENTS DETAILED HEREIN, A LICENSED ENGINEER OR ARCHITECT SHALL PREPARE SITE SPECIFIC DOCUMENTS FOR USE WITH THIS DOCUMENT.

CLIENT:
AMC PARTNSERSHIP

2810 NW 74 AVE, Miami, FL 33122

DATE: 11.06.2026

DWG. BY: L.L

CHK. BY: HFN

SCALE: NTS

DWG. #: G001

SHEET: 1 OF 8

AS-BUILT DRAWINGS

EXISTING PREFABRICATED SHED STRUCTURES

PROJECT NAME: Existing Prefabricated Shed Structures - As-Built Documentation

PROJECT ADDRESS: 2811 NW 74 AVE, Miami, FL 3312

FOLIO NUMBER: 30-3026-019-0070

OWNER: AMC PARTNSERSHIP

PREPARED FOR: Resolution for Violation / TICKET # P073717 / P073719 (Detached Structure with Electrical)

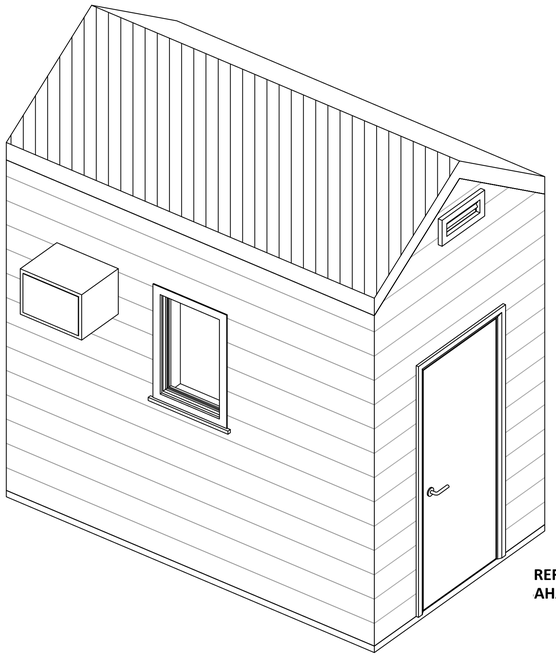

REFAB SHED
AHAMA-BANGLOW 6 FT X 10 FT

3D ISOMETRIC

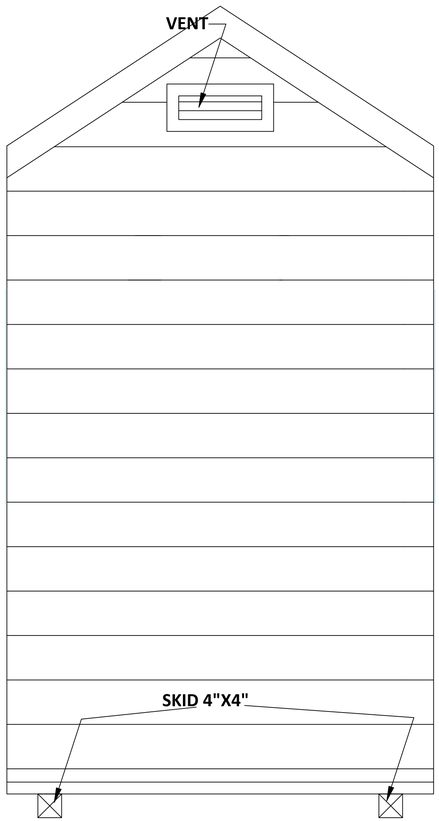

BACK ELEVATION

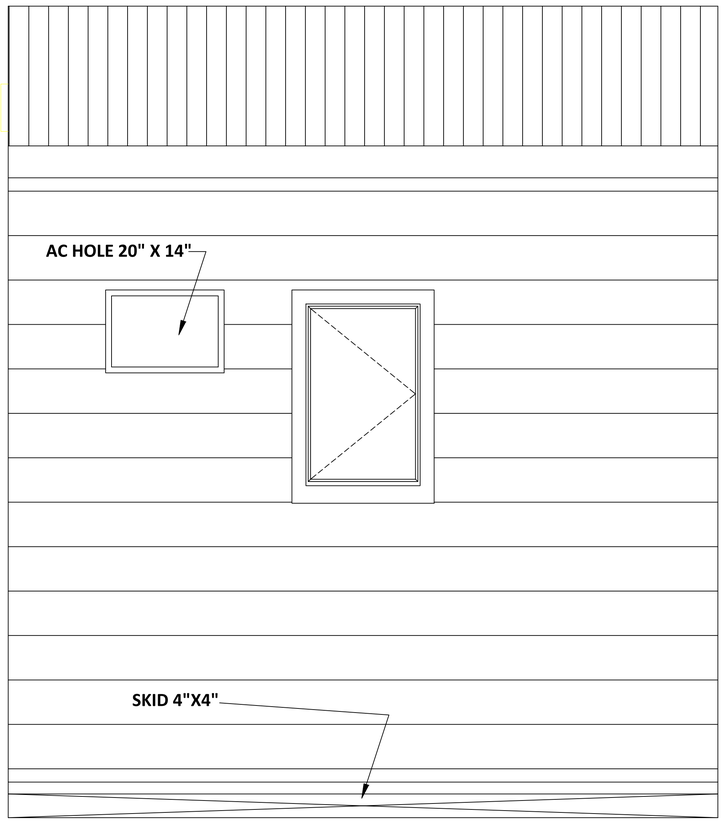

SIDE ELEVATION

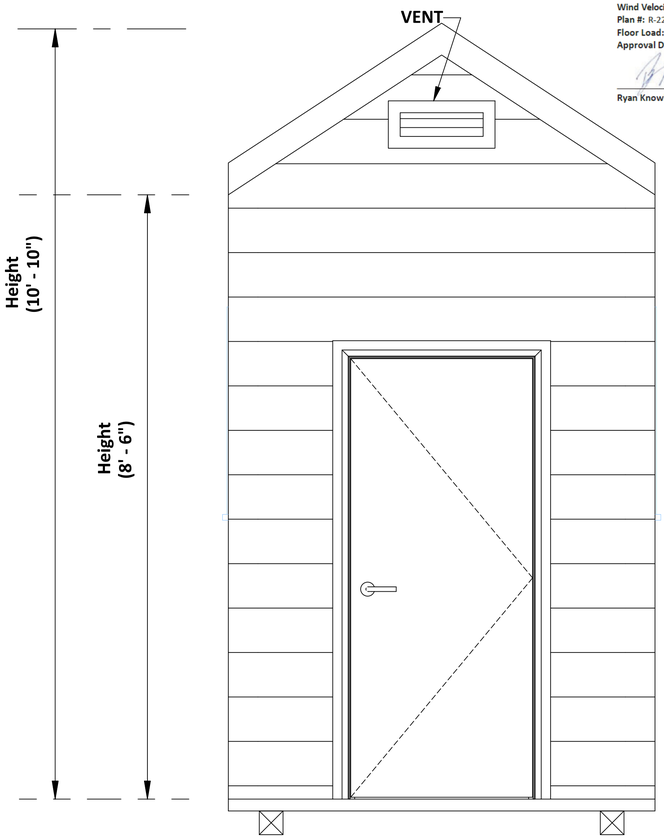

FRONT ELEVATION

Intertek
1748 33rd Street
Orlando, Florida 32839

This document meets or exceeds the Requirements of the State of Florida Manufactured Building Rules & Regulations

Construction Type: VB
Occupancy: Shed
Allowed Floors: 1
Fire Rating Ext. Walls: 0
Wind Velocity: 185 Mph
Plan #: R-22484
Floor Load: 75psf/125psf
Approval Date:07/20/2026

Ryan Knowles, SMP-64

TITLE: Shed Bahama- Bungalow 6 ft x 10 ft

ISOMETRIC VIEW AND ELEVATIONS

PREPARED BY:
COSMO Management Group
10800 Biscayne Blvd. Suite 540 Miami Shores Fl 33161

REMARKS	BYDATE

THE INSTALLATION DETAILS DESCRIBED HEREIN ARE GENERIC AND MAY NOT REFLECT ACTUAL CONDITIONS FOR A SPECIFIC SITE. IF SITE CONDITIONS CAUSE INSTALLATION TO DEVIATE FROM THE REQUIREMENTS DETAILED HEREIN, A LICENSED ENGINEER OR ARCHITECT SHALL PREPARE SITE SPECIFIC DOCUMENTS FOR USE WITH THIS DOCUMENT.

CLIENT:
AMC PARTNSERSHIP

2810 NW 74 AVE, Miami, FL 33122

DATE:11.06.2026

DWG. BY:	CHK. BY:
L.L	HFN

SCALE: NTS

DWG. #: G001

SHEET:
2
OF 8

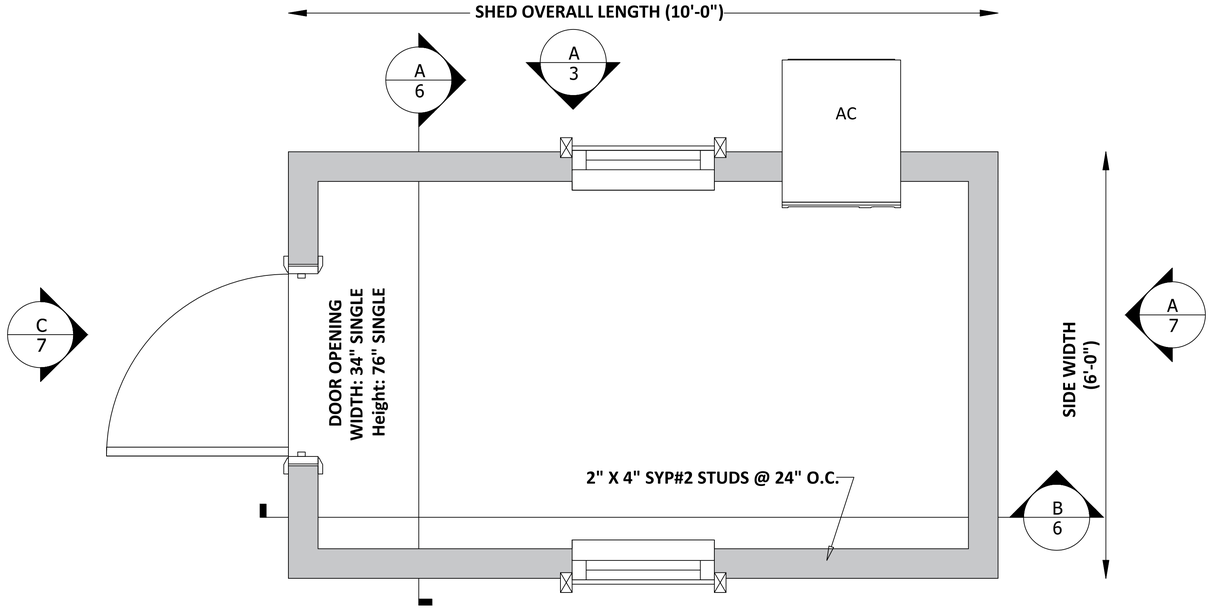

FLOOR PLAN

NOTE:
1. MIN. GRADE STUDS: 2" X 4" STUDS TO BE Fb=1200 PSI OR GREATER
2. MIN. ROOF SHEATHING: D4 ALUMINUM PANELS
3. MIN. FLOOR SHEATHING: 3/4" PLYWOOD
4. MIN.WALL SHEATHING: D4 ALUMINUM LAP SIDING

NOTE:
23" SECTIONS OF 29GA CORRUGATED METAL SIDING FASTENED W/ 3/4" #8 HEX HEAD W/ WASHER SELF TAPPING SCREWS @ 6" ON EDGE & 12" IN FIELD.

AS-BUILT DRAWINGS

EXISTING PREFABRICATED SHED STRUCTURES

PROJECT NAME: Existing Prefabricated Shed Structures - As-Built Documentation

PROJECT ADDRESS: 2811 NW 74 AVE, Miami, FL 3312

FOLIO NUMBER: 30-3026-019-0070

OWNER: AMC PARTNSERSHIP

PREPARED FOR: Resolution for Violation / TICKET # P073717 / P073719 (Detached Structure with Electrical)

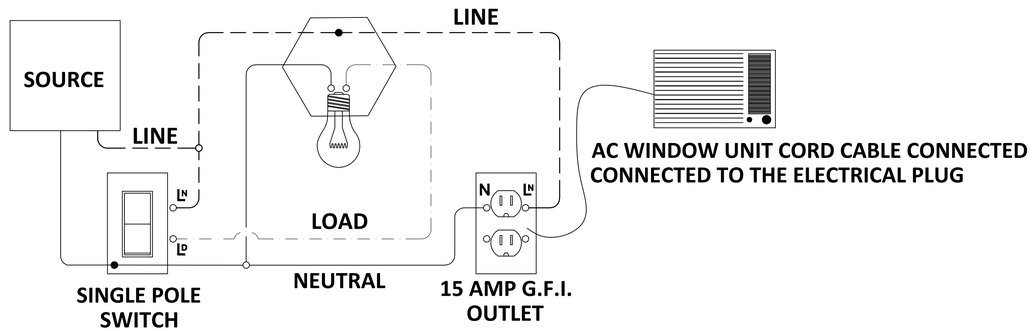

ELECTRICAL WIRING DIAGRAM

SCALE: NOT TO SCALE

ELECTRICAL NOTES & OPTIONS:
1. AS PER NEX ARTICLE 330.30(B) SECURING OF MC TYPE CABLE. UNLESS OTHERWISE PROVIDED, CABLES SHALL BE SECURED AT INTERVALS NOT EXCEEDING 6FT. CABLES CONTAINING FOUR OR FEWER CONDUCTORS SIZED NO LARGER THAN 10 AWG SHALL BE SECURED WITHIN 12 IN. OF EVERY BOX, CABINET, FITTING, OR OTHER CABLE TERMINATION.
2. ALL WIRING SHALL BE 14 GAUGE 3-WIRE MC CABLE.
3. ENCASE IN ALL METAL BOXES.

MAXIMUM NO. OF OUTLETS:4
MAXIMUM NO. OF LIGHTS:3

Intertek
1748 33rd Street
Orlando, Florida 32839

This document meets or exceeds the Requirements of the State of Florida Manufactured Building Rules & Regulations

Construction Type: VB
Occupancy: Shed
Allowed Floors: 1
Fire Rating Ext. Walls: 0
Wind Velocity: 185 Mph
Plan #: R-22484
Floor Load: 75psf/125psf
Approval Date: 07/20/2026

Ryan Knowles, SMP-64

TITLE: Shed Bahama- Bungalow 6 ft x 10 ft

FLOOR PLAN/ ELECTRICAL WIRING

PREPARED BY:
COSMO Management Group
10800 Biscayne Blvd. Suite 540
Miami Shores Fl 33161

REMARKS	BYDATE

THE INSTALLATION DETAILS DESCRIBED HEREIN ARE GENERIC AND MAY NOT REFLECT ACTUAL CONDITIONS FOR A SPECIFIC SITE. IF SITE CONDITIONS CAUSE INSTALLATION TO DEVIATE FROM THE REQUIREMENTS DETAILED HEREIN, A LICENSED ENGINEER OR ARCHITECT SHALL PREPARE SITE SPECIFIC DOCUMENTS FOR USE WITH THIS DOCUMENT.

CLIENT:
AMC PARTNSERSHIP

2810 NW 74 AVE, Miami, FL 33122

DATE:11.06.2026

DWG. BY:	CHK. BY:
L.L	HFN

SCALE: NTS

DWG. #: A001

SHEET:
3
OF 8

AS-BUILT DRAWINGS

EXISTING PREFABRICATED SHED STRUCTURES

PROJECT NAME: Existing Prefabricated Shed Structures - As-Built Documentation

PROJECT ADDRESS: 2811 NW 74 AVE, Miami, FL 3312

FOLIO NUMBER: 30-3026-019-0070

OWNER: AMC PARTNSERSHIP

PREPARED FOR: Resolution for Violation / TICKET # P073717 / P073719 (Detached Structure with Electrical)

TABLE 2: SKID RUNNER SPACING*					
WIDTHS	6'-0"	8'-0"	10'-0"	11'-8"	13'-8"
A	0'-10"	0'-9"	1'-7"	2'-8"	1'-10.5"
B	4'-4"	6'-6"	6'-10"	6'-4"	10'-11"
C	-	-	-	-	1'-10.5"
D	-	-	-	-	4'-0.25"

*VALUES ARE FROM END OF JOIST TO CENTERS OF (2) 4" X 4" SKIDS ONLY. 13'-8" WIDE SHEDS HAVE (4) SKIDS.

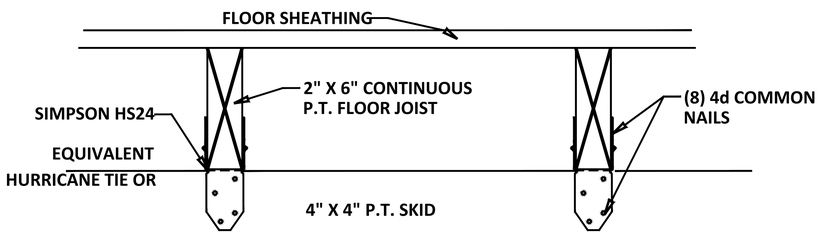

FLOOR JOIST TO SKID CONNECTION

SCALE: NOT TO SCALE

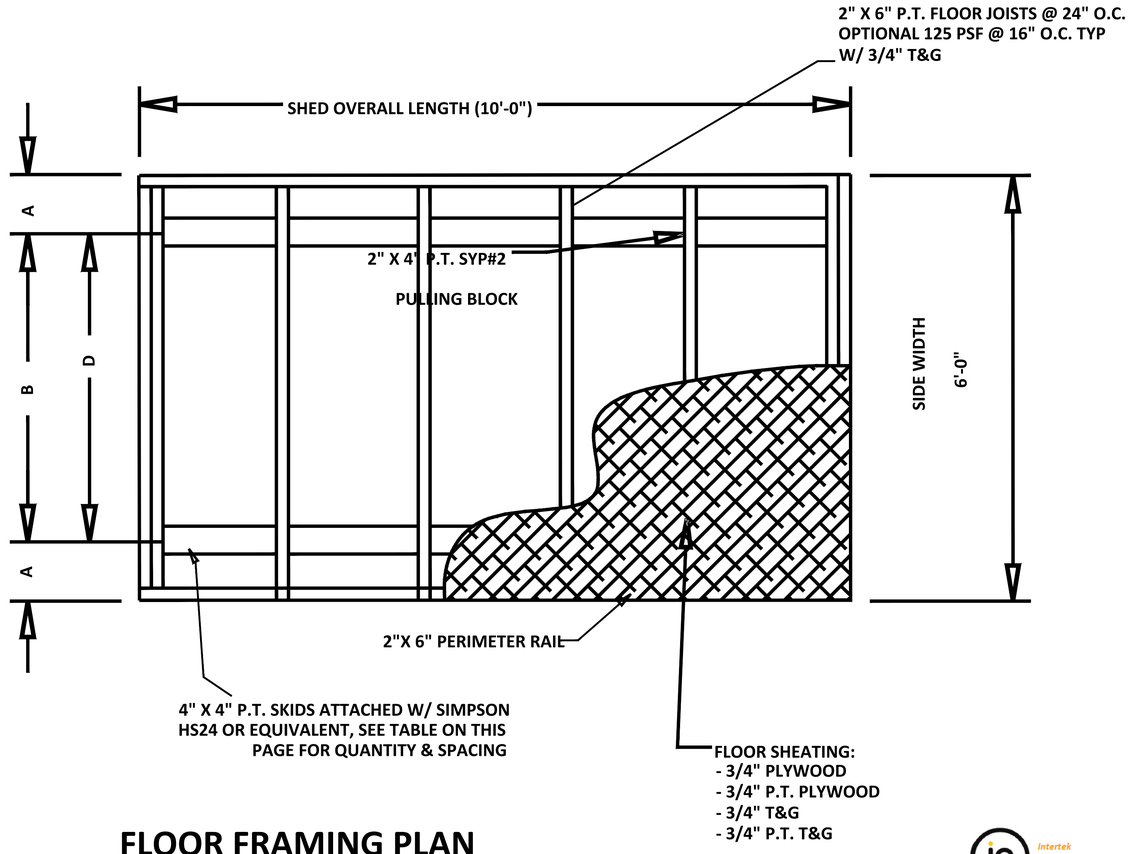

FLOOR FRAMING PLAN

SCALE: 3/8" = 1'-0"

Intertek
1748 33rd Street
Orlando, Florida 32839

This document meets or exceeds the Requirements of the State of Florida Manufactured Building Rules & Regulations

Construction Type: VB
Occupancy: Shed
Allowed Floors: 1
Fire Rating Ext. Walls: 0
Wind Velocity: 185 Mph
Plan #: R-22484
Floor Load: 75psf/125psf
Approval Date: 07/20/2026

Ryan Knowles, SMP-64

TITLE: Shed Bahama- Bungalow 6 ft x 10 ft

FLOOR FRAMING PLAN

PREPARED BY:
COSMO Management Group
10800 Biscayne Blvd. Suite 540
Miami Shores Fl 33161

REMARKS	BYDATE

THE INSTALLATION DETAILS DESCRIBED HEREIN ARE GENERIC AND MAY NOT REFLECT ACTUAL CONDITIONS FOR A SPECIFIC SITE. IF SITE CONDITIONS CAUSE INSTALLATION TO DEVIATE FROM THE REQUIREMENTS DETAILED HEREIN, A LICENSED ENGINEER OR ARCHITECT SHALL PREPARE SITE SPECIFIC DOCUMENTS FOR USE WITH THIS DOCUMENT.

CLIENT:
AMC PARTNSERSHIP

2810 NW 74 AVE, Miami, FL 33122

DATE:11.06.2026

DWG. BY: L.L	CHK. BY: HFN

SCALE: NTS

DWG. #: A002

SHEET: 4 OF 8

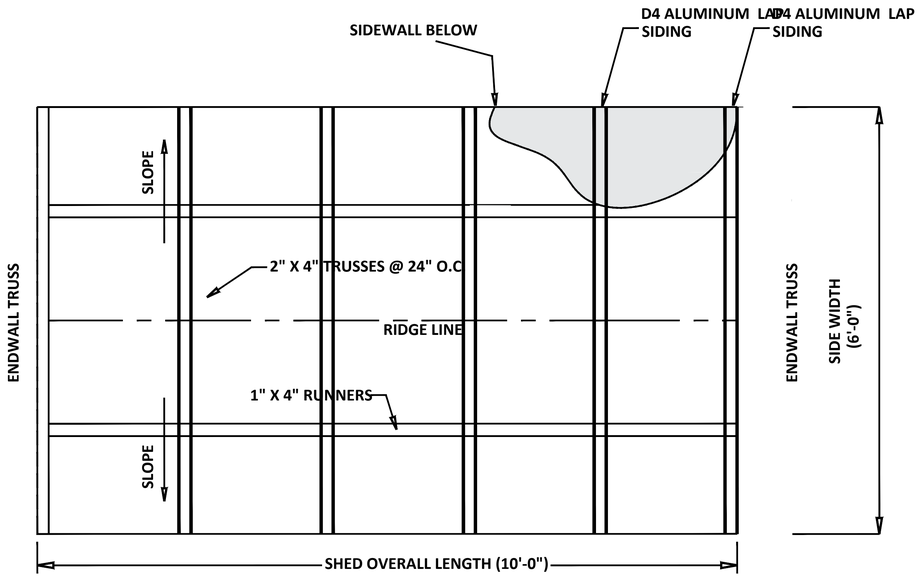

ROOF FRAMING PLAN

SCALE: 3/8" = 1'-0"

NOTE:
1. MIN. GRADE STUDS: 2" X 4" STUDS TO BE Fb=1200 PSI OR GREATER
2. MIN. ROOF SHEATHING: D4 ALUMINUM PANELS
3. MIN. FLOOR SHEATHING: 3/4" PLYWOOD
4. MIN.WALL SHEATHING: D4 ALUMINUM LAP SIDING

AS-BUILT DRAWINGS

EXISTING PREFABRICATED SHED STRUCTURES

PROJECT NAME: Existing Prefabricated Shed Structures - As-Built Documentation

PROJECT ADDRESS: 2811 NW 74 AVE, Miami, FL 3312

FOLIO NUMBER: 30-3026-019-0070

OWNER: AMC PARTNSERSHIP

PREPARED FOR: Resolution for Violation / TICKET # P073717 / P073719 (Detached Structure with Electrical)

NOTE:
2" X 4" STUDS TO BE Fb= 1200 PSI OR GREATER

NOTE:
WALL FRAMING MEMBERS ARE CONTINUOUS FROM FOUNDATION SILL TO ROOF AND SECURED TO ENSURE A CONTINUOUS LOAD PATH. WHERE WALL MEMBERS ARE NOT CONTINUOUS, SHEET METAL CLAMPS, TIES, OR CLIPS SHALL BE FORMED OF GALVANIZED STEEL OF NOT LESS THAN 0.040" NOMINAL THICKNESS.

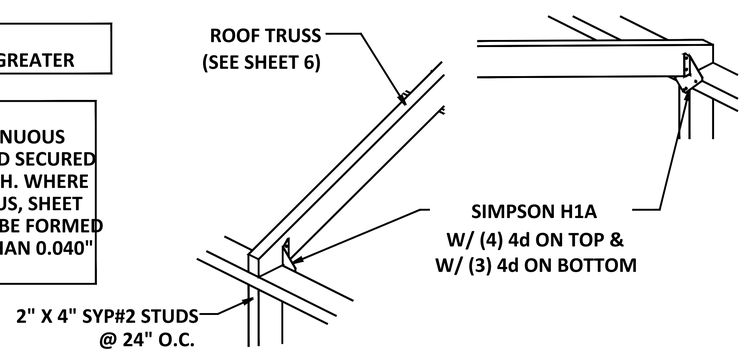

ROOF TRUSS TO WALL CONNECTION

SCALE: NOT TO SCALE

Intertek
1748 33rd Street
Orlando, Florida 32839

This document meets or exceeds the Requirements of the State of Florida Manufactured Building Rules & Regulations

Construction Type: VB
Occupancy: Shed
Allowed Floors: 1
Fire Rating Ext. Walls: 0
Wind Velocity: 185 Mph
Plan #: R-22484
Floor Load: 75psf/125psf
Approval Date: 07/20/2026

Ryan Knowles, SMP-64

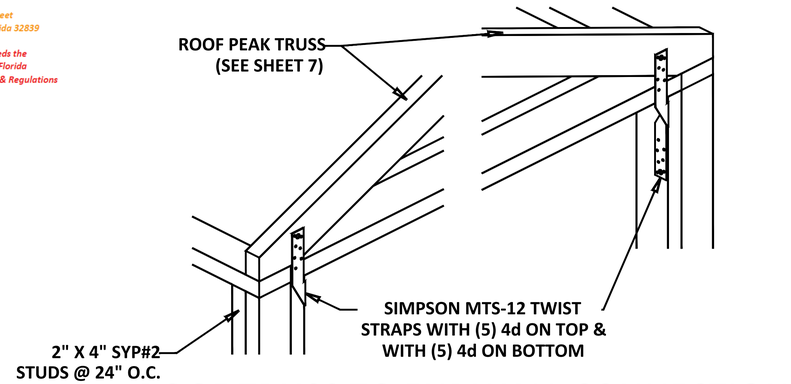

ROOF TRUSS TO ENDWALL CONNECTION

SCALE: NOT TO SCALE

TITLE: Shed Bahama- Bungalow 6 ft x 10 ft
ROOF FRAMING AND CONNECTION DETAILS

PREPARED BY:
COSMO Management Group
10800 Biscayne Blvd. Suite 540
Miami Shores Fl 33161

REMARKS	BYDATE

THE INSTALLATION DETAILS DESCRIBED HEREIN ARE GENERIC AND MAY NOT REFLECT ACTUAL CONDITIONS FOR A SPECIFIC SITE. IF SITE CONDITIONS CAUSE INSTALLATION TO DEVIATE FROM THE REQUIREMENTS DETAILED HEREIN, A LICENSED ENGINEER OR ARCHITECT SHALL PREPARE SITE SPECIFIC DOCUMENTS FOR USE WITH THIS DOCUMENT.

CLIENT:
AMC PARTNSERSHIP

2810 NW 74 AVE, Miami, FL 33122

DATE:11.06.2026

DWG. BY:	CHK. BY:
L.L	HFN

SCALE: NTS

DWG. #: A003

SHEET: 5 OF 8

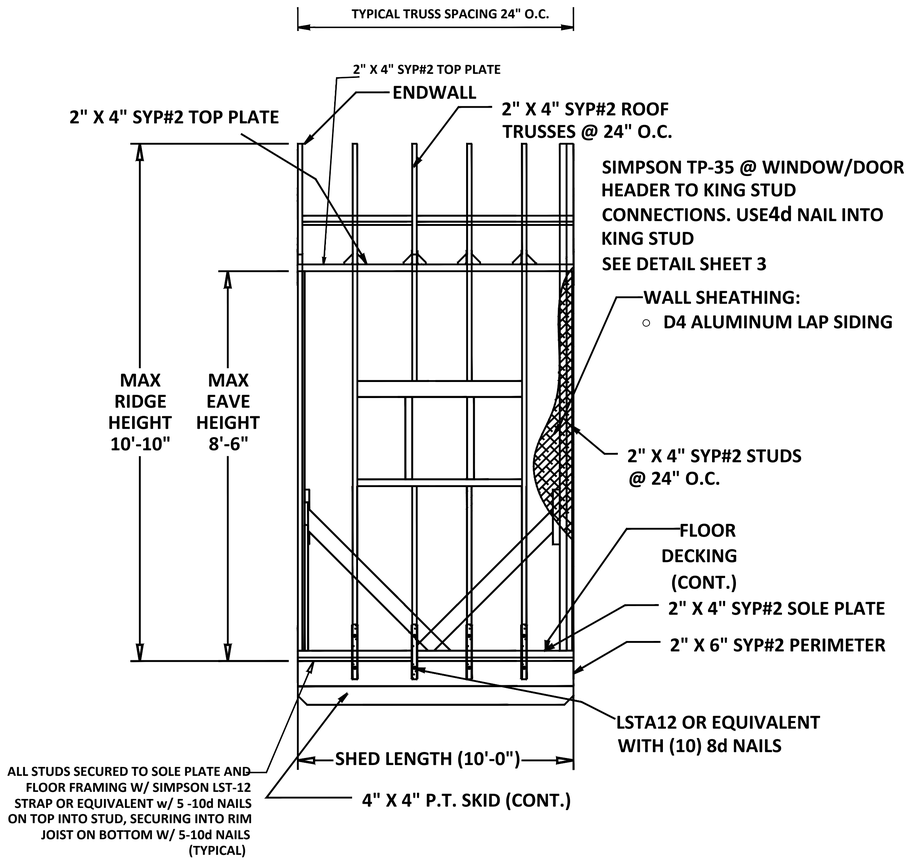

A/3 SIDEWALL FRAMING

SCALE: 3/8"=1'-0"

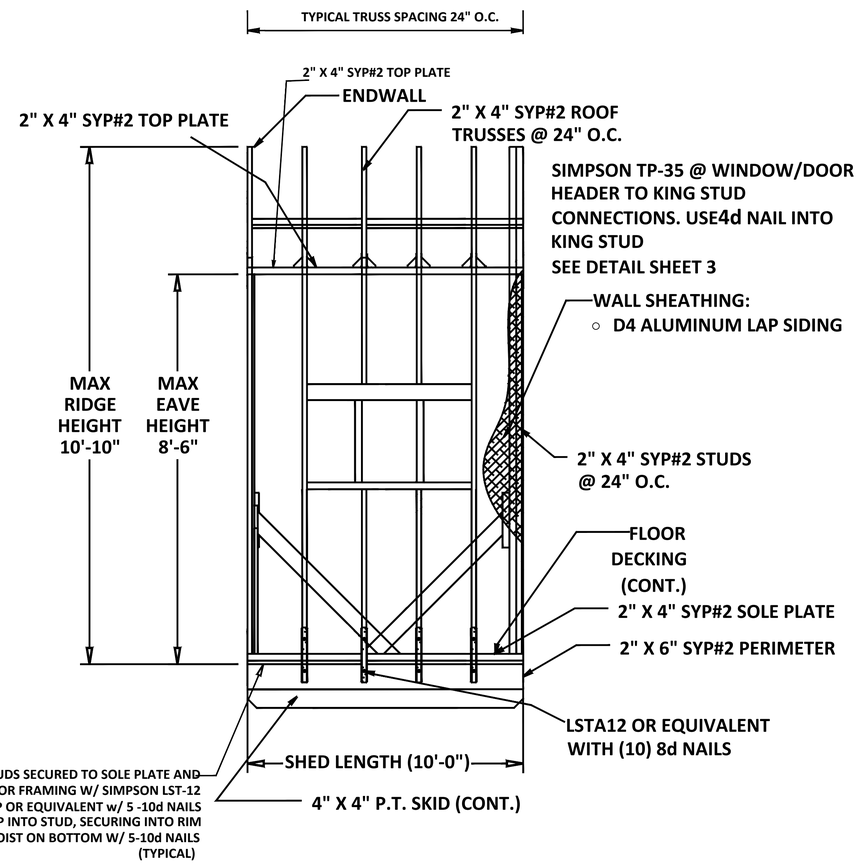

B/6 CROSS SECTION B

SCALE: 3/8"=1'-0"

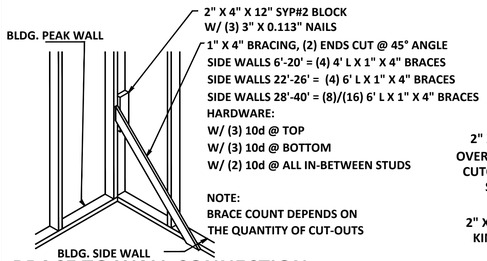

BRACE TO WALL CONNECTION

SCALE: NOT TO SCALE

NOTE:
WALL FRAMING MEMBERS ARE CONTINUOUS FROM FOUNDATION SILL TO ROOF AND SECURED TO ENSURE A CONTINUOUS LOAD PATH WHERE WALL MEMBERS ARE NOT CONTINUOUS, SHEET METAL CLAMPS, TIES, OR CLIPS SHALL BE FORMED OF GALVANIZED STEEL OF NOT LESS THAN 0.040" NOMINAL THICKNESS.

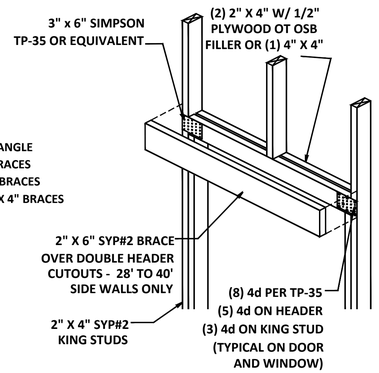

DOOR DETAIL (TYP)

SCALE: NTS

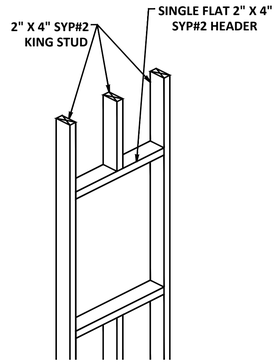

NOTE:
FOR SMALL WINDOW. WINDOW IS CENTERED WITH KING STUD

WINDOW DETAILS (TYP)

SCALE: NTS

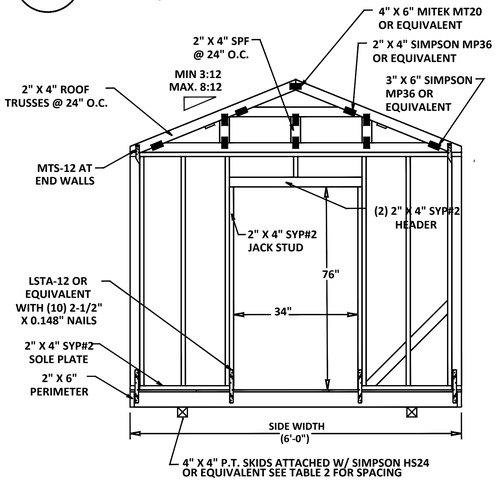

A/7 ENDWALL FRAMING

SCALE: 3/8"=1'-0"
DOOR

AS-BUILT DRAWINGS

EXISTING PREFABRICATED SHED STRUCTURES

PROJECT NAME: Existing Prefabricated Shed Structures - As-Built Documentation

PROJECT ADDRESS: 2811 NW 74 AVE, Miami, FL 3312

FOLIO NUMBER: 30-3026-019-0070

OWNER: AMC PARTNSERSHIP

PREPARED FOR: Resolution for Violation / TICKET # P073717 / P073719 (Detached Structure with Electrical)

Intertek
1748 33rd Street
Orlando, Florida 32839

This document meets or exceeds the Requirements of the State of Florida Manufactured Building Rules & Regulations

Construction Type: VB
Occupancy: Shed
Allowed Floors: 1
Fire Rating Ext. Walls: 0
Wind Velocity: 185 Mph
Plan #: R-22484
Floor Load: 75psf/125psf
Approval Date: 07/20/2026

Ryan Knowles, SMP-64

TITLE: Shed Bahama- Bungalow 6 ft x 10 ft

WALL FRAMING AND CROSS-SECTIONS

PREPARED BY:
COSMO Management Group
10800 Biscayne Blvd. Suite 540
Miami Shores Fl 33161

REMARKS	BYDATE

THE INSTALLATION DETAILS DESCRIBED HEREIN ARE GENERIC AND MAY NOT REFLECT ACTUAL CONDITIONS FOR A SPECIFIC SITE. IF SITE CONDITIONS CAUSE INSTALLATION TO DEVIATE FROM THE REQUIREMENTS DETAILED HEREIN, A LICENSED ENGINEER OR ARCHITECT SHALL PREPARE SITE SPECIFIC DOCUMENTS FOR USE WITH THIS DOCUMENT.

CLIENT:
AMC PARTNSERSHIP

2810 NW 74 AVE, Miami, FL 33122

DATE:11.06.2026

DWG. BY: L.L

CHK. BY: HFN

SCALE: NTS

DWG. #: A004

SHEET: 6 OF 8

Setup and Installation of Single Wide Shed

1. Building is placed in requested location on Schedule 40 PVC to allow for movement to plumb or square unit to house, fence, property line, etc.
2. Once unit is square and the high spot of the ground is established, the building is blocked on the high spot of the ground and leveled. The other end of the building is brought up to level and blocked. Then the center of the building is supported to level, more blocks are added to achieve the correct spacing (see Table 3).
3. After the building is level, more blocks are added to achieve the correct spacing (see Table 3).
4. Anchor placement is established by the width of the building. Holes are drilled through the 2" × 4" bottom plate with a 1/2" auger bit. 1/2" eyebolt or optional 1/2" threaded rod (for a "high set") is secured through the hole.
5. Anchors are not required in the bottom plate for doors and doorways with no footer (garage doors, for example). Header design transfers these loads.
6. Anchors to concrete shall be equal or similar to Simpson Strong-Bolts 2, per corresponding spacing (see Table 1).
7. If the unit has a floor, either a hole is dug for the 30" auger anchor and backfilled and secured as per the detail, or a 1/2" hole is drilled into the concrete 1-1/2" off the rim joist. The eyebolt is fastened through the unit and a 1/2" wedge anchor (or equal) is secured to the concrete with a 1/2" wedge anchor.
8. If the unit has a "no floor" option, anchor with 1/2" × 5" wedge anchor through the 2" × 4" bottom plate.

Auger Anchors Notes

1. Building auger anchors shall be equal or similar to Minute Man MMA-30 / 4430 DH. Work load capacity = 3,150 lbs; maximum overload capacity = 4,725 lbs.
2. Anchoring system to ground per local building code (by dealer). Locate anchors per Table 1.
3. Threaded rod with eyebolts shall be placed through the bottom plate (floor system) and attached to anchor. These can be extended with threaded rod (or straps with equal or greater strength) for elevated anchoring.
4. Anchor spacing is designed as per ASCE-7.
5. All measurements are center-to-center.
6. The minimum number of anchors per shed is four (4); one anchor per corner. Additional interior anchors are required if spacing is more than 10'-0" between anchors.
7. Anchors shall be on side walls except when the shed is placed next to an existing building, in which anchors can be placed on the end walls as close to the base as possible.
8. Foundation plans are not part of this plan set and are governed by local jurisdiction.
9. This building is exempt from the FBC Energy Conservation Code per Section R101.4.2.4 and R402.1.
10. Refer to tie-down details for proper installation requirements to meet code.
11. Double-wide sheds are secured on each side of the module side walls.

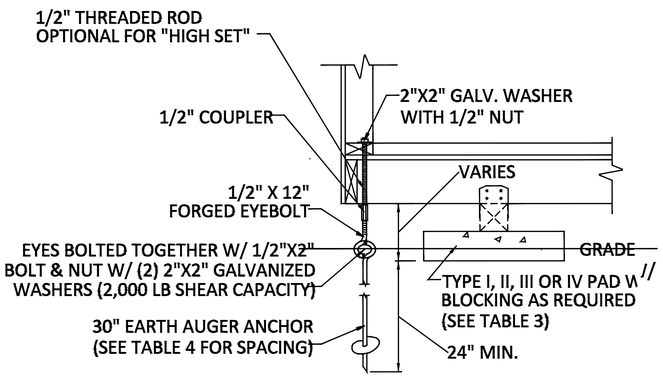

SHED WITH SKID
TO PAD OR BLOCKING



30" AUGER ANCHOR (3,150 / 4,725 LB)
INSTALLED PER MFRS INSTRUCTIONS EYELET
AT MAXIMUM OF 6" ABOVE GRADE

TABLE 1

Anchoring Spacing

SHED WIDTH	Anchor to concrete (1/2" × 5-1/2" bolts)	Anchor to concrete (1/2" × 3-3/4" bolts)	Anchor to ground (4" × 30" auger)
6' - 0"	42"	36"	48"

Notes:
1. Maximum load based on 2,000 PSF soil bearing capacity and 3,000 PSI concrete.
2. Bolts equal or similar to Simpson Strong-Bolt 2.
3. Auger equal or similar to Minute Man MMA-30 / 4430 DH (3,150 lbs).

TABLE 2

SKID RUNNER SPACING

SHED WIDTH	X1	X2	X3
6' - 0"	10"	5'-1"	1'-10 1/2"

Note:
Spacing values are from end of joist to center of (2) 4" × 4".

TABLE 4

PAD TYPES

TYPE	PAD DIMS	MAX LOAD	MATERIAL
I	2" X 8" X 16"	1778 LBS	CONC. BLOCK QUALITY CEMENT AND SAND MIX
II	4" X 8" X 16"	3500 LBS	CONC. BLOCK QUALITY CEMENT AND SAND MIX
III	16" X 18"	4000 LBS	ABS PLASTIC PADS
IV	8" X 8" X 16"	1900 LBS	CONC. BLOCK QUALITY CEMENT AND SAND MIX

Notes:
1. Maximum load is based on 2,000 PSF soil bearing capacity.
2. Hollow or solid concrete blocks (8" × 8" × 16") may be stacked on pads for high setup up to 48" without reinforcing.

TABLE 3

SUPPORT FOOTING PSD SPACING FOR RUNNER BLOCKING FOR SINGLE WIDE (SW) & DOUBLE WIDE (DW) SHEDS

SHED DESCRIPTION			PAD		75 LBS FLOOR LOAD - MAX LOAD PAD TYPE				125 LBS FLOOR LOAD - MAX LOAD PAD TYPE			
SHED WIDTH	TYPE	LW(PLF)	END PAD	MAX. SPACING	END PAD	SIDE RUNNER PAD TYPE	INTERIOR PAD	SIDE RUNNER PAD TYPE	END PAD	SIDE RUNNER PAD TYPE	INTERIOR PAD	SIDE RUNNER PAD TYPE
6' - 0"	SW	3.00 / 240	36"	36"	1458 LBS	I, II, III OR IV	1458 LBS	I, II, III OR IV	2233 LBS	II OR III	2233 LBS	II OR III

Note:
Pad spacing is center-to-center, except end pads, which are measured from end to center of pad.

AS-BUILT DRAWINGS

EXISTING PREFABRICATED SHED STRUCTURES

PROJECT NAME: Existing Prefabricated Shed Structures - As-Built Documentation

PROJECT ADDRESS: 2811 NW 74 AVE, Miami, FL 3312

FOLIO NUMBER: 30-3026-019-0070

OWNER: AMC PARTNSERSHIP

PREPARED FOR: Resolution for Violation / TICKET # P073717 / P073719 (Detached Structure with Electrical)

Intertek
1748 33rd Street
Orlando, Florida 32839

This document meets or exceeds the Requirements of the State of Florida Manufactured Building Rules & Regulations

Construction Type: VB
Occupancy: Shed
Allowed Floors: 1
Fire Rating Ext. Walls: 0
Wind Velocity: 185 Mph
Plan #: R-22484
Floor Load: 75psf/125psf
Approval Date: 07/20/2026

Ryan Knowles, SMP-64

TITLE: Shed Bahama- Bungalow 6 ft x 10 ft

ANCHORING DETAILS

PREPARED BY:
COSMO Management Group
10800 Biscayne Blvd. Suite 540
Miami Shores Fl 33161

REMARKS	BYDATE

THE INSTALLATION DETAILS DESCRIBED HEREIN ARE GENERIC AND MAY NOT REFLECT ACTUAL CONDITIONS FOR A SPECIFIC SITE. IF SITE CONDITIONS CAUSE INSTALLATION TO DEVIATE FROM THE REQUIREMENTS DETAILED HEREIN, A LICENSED ENGINEER OR ARCHITECT SHALL PREPARE SITE SPECIFIC DOCUMENTS FOR USE WITH THIS DOCUMENT.

CLIENT:
AMC PARTNSERSHIP

2810 NW 74 AVE, Miami, FL 33122

DATE:11.06.2026

DWG. BY: L.L

CHK. BY: HFN

SCALE: NTS

DWG. #: A005

SHEET: 7 OF 8

ALTERNATE FASTENING SCHEDULE

CONNECTION	FASTENING	
ALT 31-33. WOOD STRUCTURAL PANELS AND PARTICLEBOARD SUBFLOOR, ROOF AND WALL SHEATHING (TO FRAMING)	1/2" AND LESS	2" X 0.092" RING SHANK NAIL 5" FROM EDGE, 10" O.C.

STRAP & FASTENER SCHEDULE *

	PART#/DESC .	UPLIFT	WALL FASTENER	RAFTER FASTENER	PLATE FASTENER
RAFTER (B)	H1	400	-	6 - 8d X 1.5"	4 - 5d
	H11Z	750	-	6 - 16d X 2.5"	6 - 16d X 2.5"
	H2A	495	5 - 8d X 1.5"	5 - 8d X 1.5"	2 - 8d X 1.5"
	H2.5A	535	-	5 - 8d	5 - 5d
	H2.5	410	5 - 8d	5 - 8d	-
	H2.5T	545	5 - 8d	5 - 8d	-
	H2A	495	7 - 8d X 1.5"	5 - 8d X 1.5"	-
	H3	320	4 - 8d	4 - 8d	-
	H4	235	4 - 8d	4 - 8d	-
	HS	265	4 - 8d	4 - 8d	-
	LTS-12	620	6 - 10d X 1.5"	6 - 10d X 1.5"	-
	LTS-16	620	6 - 10d X 1.5"	6 - 10d X 1.5"	-
	LTS-18	620	6 - 10d X 1.5"	6 - 10d X 1.5"	-
	LTS-20	620	6 - 10d X 1.5"	6 - 10d X 1.5"	-
	MTS-12	860	7 - 10d X 1.5"	7 - 10d X 1.5"	-
	MTS-16	860	7 - 10d X 1.5"	7 - 10d X 1.5"	-
	MTS-18	860	7 - 10d X 1.5"	7 - 10d X 1.5"	-
	MTS-20	860	7 - 10d X 1.5"	7 - 10d X 1.5"	-
PORCH	PART#/DESC .	UPLIFT	COLUMN FASTENER	RAFTER FAST ENER	
	A21	245	2 - 10d X 1.5"	2 - 10d X 1.5"	
	A23	585	4 - 10d X 1.5"	4 - 10d X 1.5"	
	A33	750	4 - 10d	4 - 10d	
BTM PLATE	PART#/DESC.	UPLIFT	WALL FASTENER	FLOOR FASTENER	
	LSTA-18	1110	7 - 10d	7 - 10d	
HEADER (D)	PART#/DESC ,	UPLIFT	STUD FASTENER	HEADER FASTENER	
	TP-35	N/R	5'-3" X 0.131"	5'-3" X 0.131"	
	HP40,41,80,81	4725	5'-3" X 0.131"	5'-3" X 0.131"	
TIE-DOWNS	PART#/DESC .	UPLIFT	WALL FASTENER	FLOOR FASTENER	
	20GA. 1-1/4" WIDE	4725	7 - 10d X 1.5"	-	
	5/8" X 30" ANCHOR	4300	-	-	

A. ALL STRAPS CAN BE SUBSTITUTED WITH AN EQUIVALENT BRAND MEETING SAME STRENGTHS.
B. RAFTER TIES TO STUD WALL TO BE AT EVERY CONNECTION FOR 24" O.C. & CAN EVERY OTHER FOR 16" O.C. BUT IS REQUIRED ON CORNERS AND STUDS ADJACENT TO CORNERS.
C. ONLY NEEDED ON ALUMINUM & VINYL SHEATHING WALLS.
D. HEADERS OVER 6'-0" SPAN.

PRODUCT OPTIONS

PRODUCT CAT.	SUB. CATEGORY	MANUFACTURER	MODEL I DESC.	STATE OF FL APPROVAL #:
EXTERIOR DOORS	SWINGING EXT	EAGAN	E1HDL	FL#: 12820-R3
WINDOWS	SINGLE HUNG	CROFT	VERT SLIDER	FL#: 10853-R5

NOTES:
A. COMMON OR BOX NAILS ARE PERMITTED TO BE USED EXCEPT WHERE OTHERWISE STATED.
B. NAILS SPACED AT 6 INCHES ON CENTER ON CENTER AT EDGES, 12 INCHES AT INTERMEDIATE SUPPORTS EXCEPT 6 INCHES AT SUPPORTS WHERE SPANS ARE 48 INCHES OR MORE.FOR NAILING OF WOOD STRUCTURAL PANEL AND PARTICLEBOARD DIAGRAMS AND SHEAR WALLS, REFER TO SECTION 2305. NAILS FOR WALL SHETHING ARE PERMITTED TO BE COMMON, BOX OR CASING.
C. COMMON OR DEFORMED SHANK (6d - 2 1/2" X 0.113"; 8d - 2-1/2" X 0.131"; 1Od - 3" X 0.148"). D. COMMON (6d - 2" X 0.113"; 8d - 2-1/2" X 0.131"; 1Od - 3" X 0.148").
D. DEFORMED SHANK (6d - 2" X 0.113"; 8d - 2-1/2" X 0.131"; 1Od - 3" X 0.148").
E. CORROSION-RESISTANT SIDING (6d - 1-7/8" X 0.106"; 8d - 2-3/8" X 0.128") OR CASING (6d - 2" X 0.099"; 8d - 2-1/2" X 0.113") NAIL
F. FASTENERS SPACED 3 INCHES ON CENTER AT EXTERIOR EDGES AND 6 INCHES ON CENTER AT INTERMEDIATE SUPPORTS, WHEN USED AS STRUCTURAL SHEATHING. SPACING SHALL BE 6 INCHES ON CENTER ON THE EDGES AND 12 INCHES ON CENTER AT INTERMEDIATE SUPPORTS, WHEN USED FOR NON STRUCTURAL SHEATHING.
G. CORROSION-RESISTANT ROOFING NAILS WITH 7/16" DIAMETER HEAD AND 1-1/2" LENGTH FOR 1/2" SHEATHING AND 1-3/4" LENGTH FOR SHEATHING.
H. CORROSION-RESISTANT STAPLES WITH NOMINAL 7/ 16" CROWN OR 1" CROWN AND 1-1/4" LENGTH FOR 1/2" FOR 25/32" SHETHING PANEL SUPPORTS AT 16" (20" IF STRENGTH AXIS IS THE LONG DIRECTION OF THE PANEL, UNLESS OTHERWISE MARKED).
I. PANEL SUPPORTS AT 24 INCHES. CASING OR FINISH NAILS SPACED AT 6 INCHES ON PANEL EDGES, 12 INCHES AT INTERMEDIATE SUPPORTS.
J. FOR ROOF SHEATHING APPLICATIONS, 8d NAILS (2-1/2" X 0.113") ARE THE MINIMUM REQUIRED FOR WOOD STRUCTURAL PANELS.
K. STAPLES SHALL HAVE A MINIMUM CROWN WIDTH OF 7/16".
L. FOR ROOF SHEATHING APPLICATIONS, FASTENERS SPACED AT 4 INCHES ON CENTER AT EDGES, 8 INCHES AT INTERMEDIATE SUPPORTS.
M. FASTENERS SPACED AT 4 INCHES ON CENTER AT EDGES, 8 INCHES AT INTERMEDIATE SUPPORTS FOR SUBFLOOR AND SHEATHING 3 INCHES ON CENTER AT EDGES, 6 INCHES AT INTERMEDIATE SUPPORTS FOR ROOF SHEATHING.
N. FASTENERS SPACED AT 4 INCHES ON CENTER AT EDGES, 8 INCHES AT INTERMEDIATE SUPPORTS.
O. SEE FASTENER ALTERNATE SCHEDULE.
P. FASTENERS MUST BE INSTALLED WITH EVEN SPACING BETWEEN THEM ACROSS ATTACHING MEMBER.

FASTENING SCHEDULE (FBC TABLE 2304.10.1)

CONNECTION	FASTENING	CONNECTION
1. JOIST TO SILL OR GIRDER	3 - 8d COMMON (2-1/2" X 0.131") 3 - 3" 14 GAUGE STAPLES	TOENAIL
2. BRINGING TO JOIST	2 - 8d COMMON (2-1/2" X 0.131") 2 - 8d COMMON (2-1/2" X 0.131") 2 - 3" 14 GAUGE STAPLES	TOENAIL EACH END
3. 1"x6" SUBFLOOR OR LESS TO EACH JOIST	2 - 8d COMMON (2-1/2" X 0.131")	FACE NAIL
4.WIDER THAN 1"x6" SUBFLOOR TO EACH JOIST	3 - 8d COMMON (2-1/2" X 0.131")	FACE NAIL
5. 2" SUBFLOOR TO JOIST OR GIRDER	2 - 16d COMMON (3-1/2" X 0.162")	BLIND AND FACE NAIL
6. SOLE PLATE TO JOIST OR BLOCKING SOLE PLATE TO JOIST AT BLOCKING AT BRACED WALL PANEL	16d (3-1/2" X 0.135") AT 16" O.C. 3" X 0.131 NAILS AT 8" O.C. 3" 14 GAUGE STAPLES AT 12" O.C. 3 - 16d COMMON (3-1/2" X 0.135") AT 16" O.C. 4 - 3" X 0.131" NAILS AT 16" O.C. 4 - 3" 14 GAUGE STAPLES AT 16" O.C.	TYPICAL FACE NAIL BRACED WALL PANEL
7. TOP PLATE TO STUD	2 - 16d COMMON (3-1/2" X 0.162") 3 - 3" X 0.131" NAILS 3 - 3" 14 GAUGE STAPLES	END NAIL
8. STUD TO SOLE PLATE	4 - 8d COMMON (2-1/2" X 0.131") 4 - 3" X 0.131 NAILS 3 - 3" 14 GAUGE STAPLES 2 - 16d COMMON (3-1/2" X 0.162") 3 - 3" X 0.131" NAILS 3 - 3" 14 GAUGE STAPLES	TOE NAIL END NAIL
9. DOUBLE STUDS	16d (3-1/2" X 0.135") AT 24" O.C.	3" X 0.131" NAILS AT 8" O.C. 3" 14 GAUGE STAPLES AT 8" O.C.
10. DOUBLE TOP PLATES DOUBLE TOP PLATES	16d (3-1/2" X 0.135") AT 16" O.C.	3" X 0.131" NAILS AT 8" O.C. 3" 14 GAUGE STAPLES AT 8" O.C. 8 - 16d COMMON (3-1/2" X 0.135") AT 16" O.C.
11. BLOCKING BETWEEN JOISTS OR RAFTERS TO TOP PLATE	3 - 8d COMMON (2-1/2" X 0.131") 3 - 3" X 0.131" NAILS 3 - 3" 14 GAUGE STAPLES	TOENAIL
12. RIM JOIST TO TOP PLATE	8d COMMON (2-1/2" X 0.131") AT 6" O.C. 3" X 0.131" NAILS AT 6" O.C. 3" 14 GAUGE STAPLES AT 6" O.C.	TOENAIL
13. TOP PLATES, LAPS AND INTERSECTIONS	2 - 16d COMMON (3-1/2" X 0.162")	3 - 3" X 0.131" NAILS 3 - 3" 14 GAUGE STAPLES"
14. CONTINUOUS HEADER, TWO PIECES	16d COMMON (3-1/2" X 0.162")	16" O.C. ALONG EDGE
15. CEILING JOISTS TO PLATE	3 - 16d COMMON (3-1/2" X 0.131") 5 - 3" X 0.131" NAILS 3 - 3" 14 GAUGE STAPLES	TOE NAIL
16. RIM JOIST TO TOP PLATE	4 - 8d COMMON (2-1/2" X 0.131")	TOE NAIL
17. CEILING JOISTS, LAPS OVER PARTITIONS	3 - 16d COMMON (3-1/2" X 0.135") MIN. 4 - 3" X 0.131" NAILS 4 - 3" 14 GAUGE STAPLES	FACE NAIL
18. CEILING JOISTS TO PARALLEL RAFTERS	3 - 16d COMMON (3-1/2" X 0.135") MIN. 4 - 3" X 0.131" NAILS 4 - 3" 14 GAUGE STAPLES	FACE NAIL
19. RAFTER TO PLATE	3 - 8d COMMON (2-1/2" X 0.131") 3 - 3" X 0.131" NAILS 3 - 3" 14 GAUGE STAPLES	TOE NAIL
20. 1" DIAGONAL BRACE TO EACH STUD & PLATE	2 - 8d COMMON (2-1/2" X 0.131") 2 - 3" X 0.131" NAILS 3 - 3" 14 GAUGE STAPLES	FACE NAIL

FASTENING SCHEDULE (FBC TABLE 2304.10.1)

21. 1"X8" SHEATHING TO EACH BEARING	3 - 8d COMMON (2-1/2" X 0.131")	FACE NAIL
22.WIDER THAN 1"X8" SHEATHING TO EA. BEARING	3 - 8d COMMON (2-1/2" X 0.131")	FACE NAIL
23. BUILT-UP CORNER STUDS	16d COMMON (3-1/2" X 0.162") MIN. 3" X 0.131" NAILS 3" 14 GAUGE STAPLES	24" O.C. 16" O.C. 16" O.C.
24. BUILT-UP GIRDER AND BEAMS	20d COMMON (4" X 0.192") AT 32" O.C. 3" X 0.131" NAILS AT 24" O.C. 3" 14 GAUGE STAPLES AT 24" O.C. 2 - 20d COMMON (4" X 0.192") 3 - 3" X 0.131" NAILS 3 - 3" 14 GAUGE STAPLES"	FACE NAIL AT TOP AND BOTTOM STAGGERED ON OPPOSITE SIDES FACE NAIL AT ENDS AND AT EACH SPLICE
25. 2" PLANKS	16d COMMON (3-1/2" X 0.162")	AT EACH BEARING
26. COLLAR TIE TO RAFTER	3 - 1Od COMMON (3" X 0.148") MIN. 4 - 3" X 0.131" NAILS 4 - 3" 14 GAUGE STAPLES"	FACE NAIL
27. JACK RAFTER TO HIP	3 - 10d COMMON (3" X 0.148") 4 - 3" X 0.131" NAILS 4 - 3" 14 GAUGE STAPLES 2 - 16d COMMON (3-1/2" X 0.162") 3 - 3" X 0.131" NAILS 3 - 3" 14 GAUGE STAPLES	TOE NAIL FACE NAIL
28. ROOF RAFTER TO 2-BY RIDGE BEAM	2 - 16d COMMON (3-1/2" X 0.162") 3 - 3" X 0.131" NAILS 3 - 3" 14 GAUGE STAPLES 2 - 16d COMMON (3-1/2" X 0.162") 3 - 3" X 0.131" NAILS 3 - 3" 14 GAUGE STAPLES	TOE NAIL FACE NAIL
29. JOIST TO BAND JOIST	3 - 16d COMMON (3-1/2" X 0.135") 4 - 3" X 0.131" NAILS 4 - 3" 14 GAUGE STAPLES 3 - 16d COMMON (3-1/2" X 0.162")	FACE NAIL
30. LEDGER STRIP	4 - 3" X 0.131" NAILS 4 - 3" 14 GAUGE STAPLES	FACE NAIL AT EACH JOINT
31. WOOD STRUCTURAL PANELS AND PARTICLEBOARD (B) SUBFLOOR, ROOF AND WALL SHEATHING (TO FRAMING) SINGLE FLOOR (COMBINATION SUBFLOOR-UNDERLAYMENT TO 19/32" TO 3/4" FRAMING)	1/2" AND LESS 6d (C,I,Q) 2-3/8" X 0.113" NAIL(N) 1-3/4" 16 GAUGE(O) 19/32" TO 3/4" 8d(D) OR 6d (E) 2-3/8" X 0.113" NAIL(N) 2" 16 GAUGE (P) 7/8" TO 1" 8d(C) 1-1/8" TO 1-1/4" 10d(D) OR 8d(D) 3/4" AND LESS 6d(C) 7/8" TO 1" 8d(C) 1-1/8" TO 1-1/4" 10d(D) OR 8d(D)	6" O.C. EDGES AND INTERMEDIATE, 4" O.C. AT COMPONENT AND CLADDING EDGE STRIP # ZONE 3 (REFER TO FIG. 30.4-1 OF ASCE 7)
32. PANEL SIDING (TO FRAMING) (Q)	1/2" OR LESS 6d(F) 5/8" 8d(F)	
33. FIBERBOARD SHEATHING (G,Q)	1/2" AND LESS NO. 11 GAUGE ROOFING NAIL(H) 6d COMMON NAIL (2" X 0.113") NO. 16 GAUGE 25/32" STAPLE (I) NO. 11 GAUGE NAIL(H) 8d COMMON NAIL (2 1/2" X 0. 131") NO. 16 GAUGE STAPLE (I)	6" O.C. EDGES AND INTERMEDIATE
34. INTERIOR PANELING	1/4" 4d(J) 3/8" 6d(K)	6" O.C. EDGES AND INTERMEDIATE

AS-BUILT DRAWINGS

EXISTING PREFABRICATED SHED STRUCTURES

PROJECT NAME: Existing Prefabricated Shed Structures - As-Built Documentation

PROJECT ADDRESS: 2811 NW 74 AVE, Miami, FL 3312

FOLIO NUMBER: 30-3026-019-0070

OWNER: AMC PARTNSERSHIP

PREPARED FOR: Resolution for Violation / TICKET # P073717 / P073719 (Detached Structure with Electrical)

Intertek
1748 33rd Street
Orlando, Florida 32839

This document meets or exceeds the Requirements of the State of Florida Manufactured Building Rules & Regulations

Construction Type: VB
Occupancy: Shed
Allowed Floors: 1
Fire Rating Ext. Walls: 0
Wind Velocity: 185 Mph
Plan #: R-22484
Floor Load: 75psf/125psf
Approval Date: 07/20/2026

Ryan Knowles, SMP-64

TITLE: Shed Bahama- Bungalow 6 ft x 10 ft

SCHEDULES

PREPARED BY:
COSMO Management Group
10800 Biscayne Blvd. Suite 540 Miami Shores Fl 33161

REMARKS	BYDATE

THE INSTALLATION DETAILS DESCRIBED HEREIN ARE GENERIC AND MAY NOT REFLECT ACTUAL CONDITIONS FOR A SPECIFIC SITE. IF SITE CONDITIONS CAUSE INSTALLATION TO DEVIATE FROM THE REQUIREMENTS DETAILED HEREIN, A LICENSED ENGINEER OR ARCHITECT SHALL PREPARE SITE SPECIFIC DOCUMENTS FOR USE WITH THIS DOCUMENT.

CLIENT:
AMC PARTNSERSHIP

2810 NW 74 AVE, Miami, FL 33122

DATE:11.06.2026

DWG. BY: L.L

CHK. BY: HFN

SCALE: NTS

DWG. #: A006

SHEET: 8 OF 8